SYNERGIX®

HEXAGON LOCK NUT WITH NYLON INSERT (THICK TYPE)

STEEL CLASS 8 & 10 | ZINC

SF-E088 SERIES
SF-E089 SERIES

ISO 7040
DIN 982~

STEEL

CLASS 6/8* | 10

ZINC PLATE

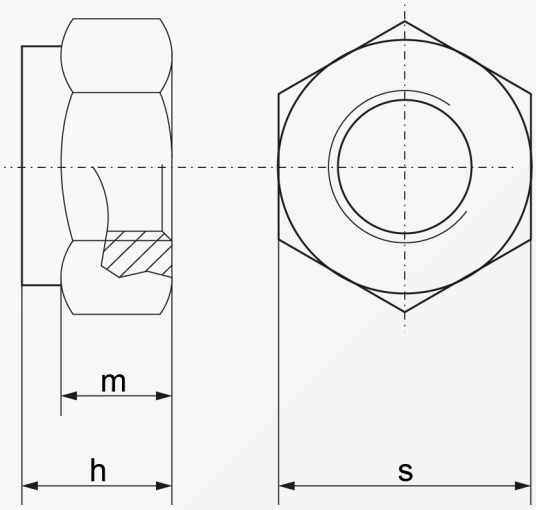

Dimensions	$h_{ISO/DIN}$	$m_{min.}$	$s_{ISO/DIN}$
M 3	4.5	2.15	5.5
M 4	6	2.9	7
M 5	6.8/6.3	4.4	8
M 6	8	4.9	10
M 8	9.5	6.44	13
M 10	11.9/11.5	8.04	16/17
M 12	14.9/14	10.37	18/19
M 14	17/16	12.1	21/22
M 16	19.1/18	14.1	24
M 20	22.8/22	16.9	30
M 24	27.1/28	20.2	36

RoHS 2002/95/EC
RoHS Directive Compliance

Above datas are for reference only
For use at temperature -50 to +120 degree
Class 8 material, starts from M4 diameter
Class 10 material, starts from M6 diameter
* denotes ≤ M4 : property class = 6

Note:
E088 denotes steel class 8 zinc plate
E089 denotes steel class 10 zinc plate

Part number built example :

e.g. (1) Diameter M10 in steel class 8 material »SF-E088 M10
e.g. (2) Diameter M12 in steel class 8 material (ISO Rated) »SF-E088 M12-ISO
e.g. (3) Diameter M16 in steel class 10 material »SF-E089 M16

sales@synergixfast.com www.synergixfast.com Phone: +65 6 316 2630 | Fax: +65 6 316 2730